FRETTING FATIGUE OF INTERFERENCE FITTED SHAFTS

by

Peter Laczko

FRETTING FATIGUE OF INTERFERENCE FITTED SHAFTS

- Fatigue failure of shafts at interference fitted hubs, gears and support rollers.
- Fretting due to microscopic relative movement within the elastic deformation range of the shaft.
- Relative movement caused by cyclic bending or torsional stress of the shaft, and large disparity of stiffness between the shaft and fitted component.
- Main examples used in this talk are kiln or drier trommel support rollers.
- Other common examples are conveyor pulley drive shaft couplings.
- Increasing use of keyless interference fitted couplings and output gears

FRETTING FATIGUE OF INTERFERENCE FITTED SHAFTS

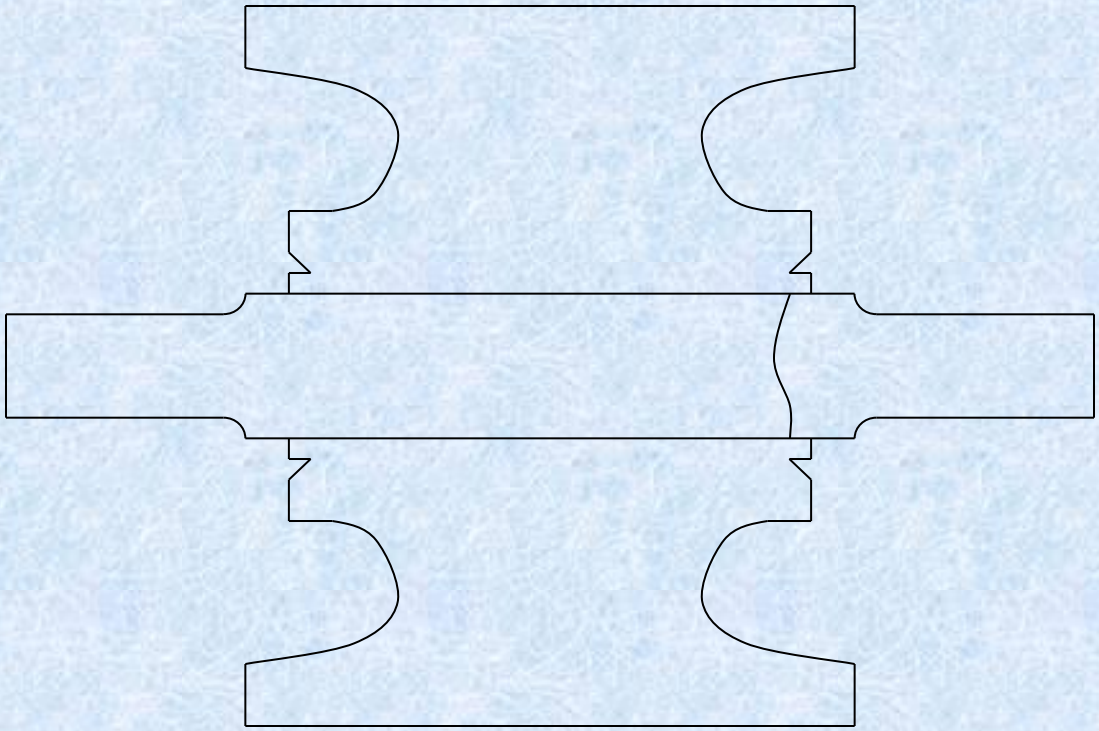

- Typical interference fitted hub or roller.
  Interference fit 0.001- 0.0015” per inch diameter.

FRETTING FATIGUE OF INTERFERENCE FITTED SHAFTS



FRETTING FATIGUE OF INTERFERENCE FITTED SHAFTS



FRETTING FATIGUE OF INTERFERENCE FITTED SHAFTS



FRETTING FATIGUE OF INTERFERENCE FITTED SHAFTS



FRETTING FATIGUE OF INTERFERENCE FITTED SHAFTS



FRETTING FATIGUE OF INTERFERENCE FITTED SHAFTS

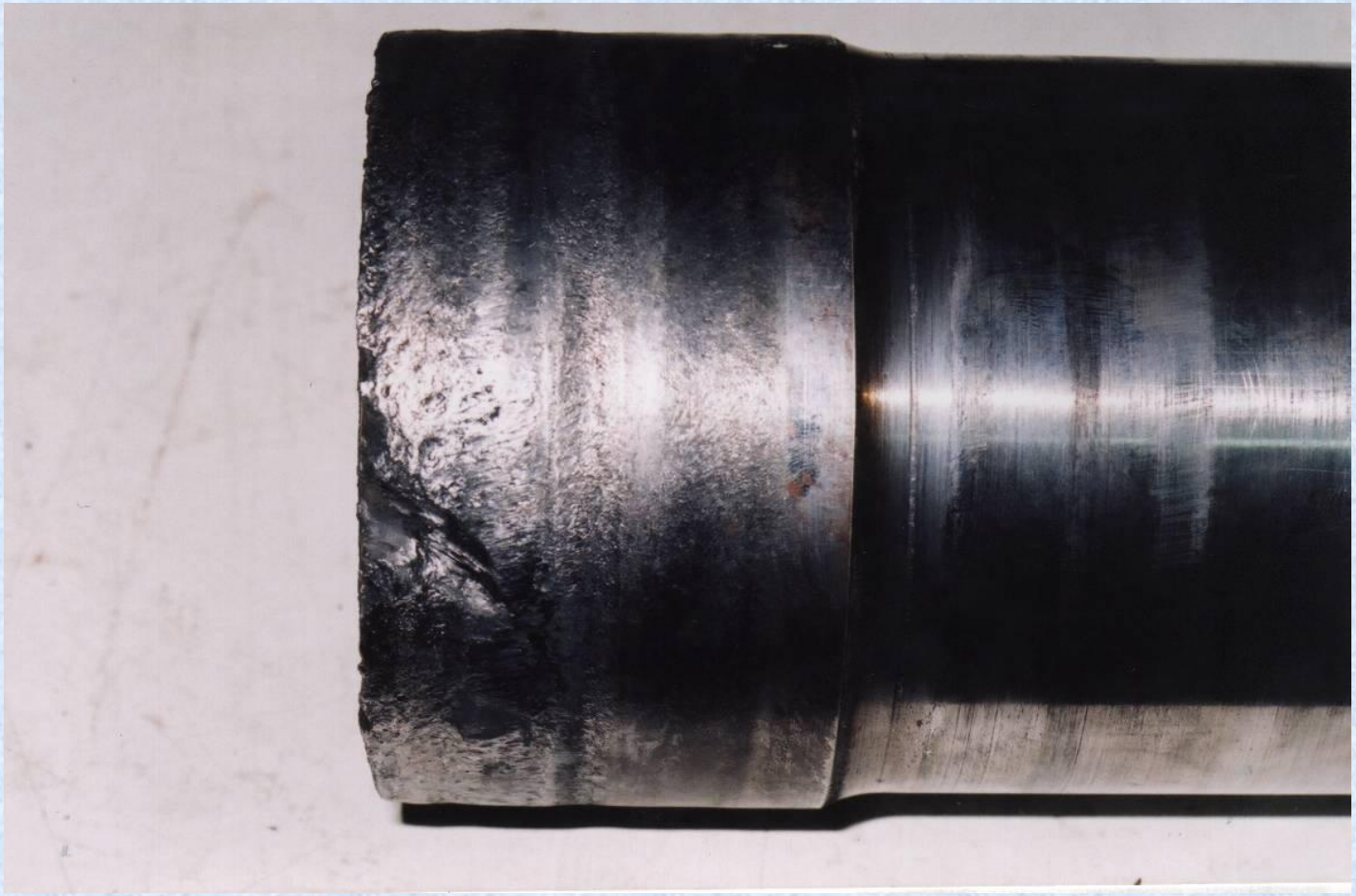

FRETTING FATIGUE OF INTERFERENCE FITTED SHAFTS

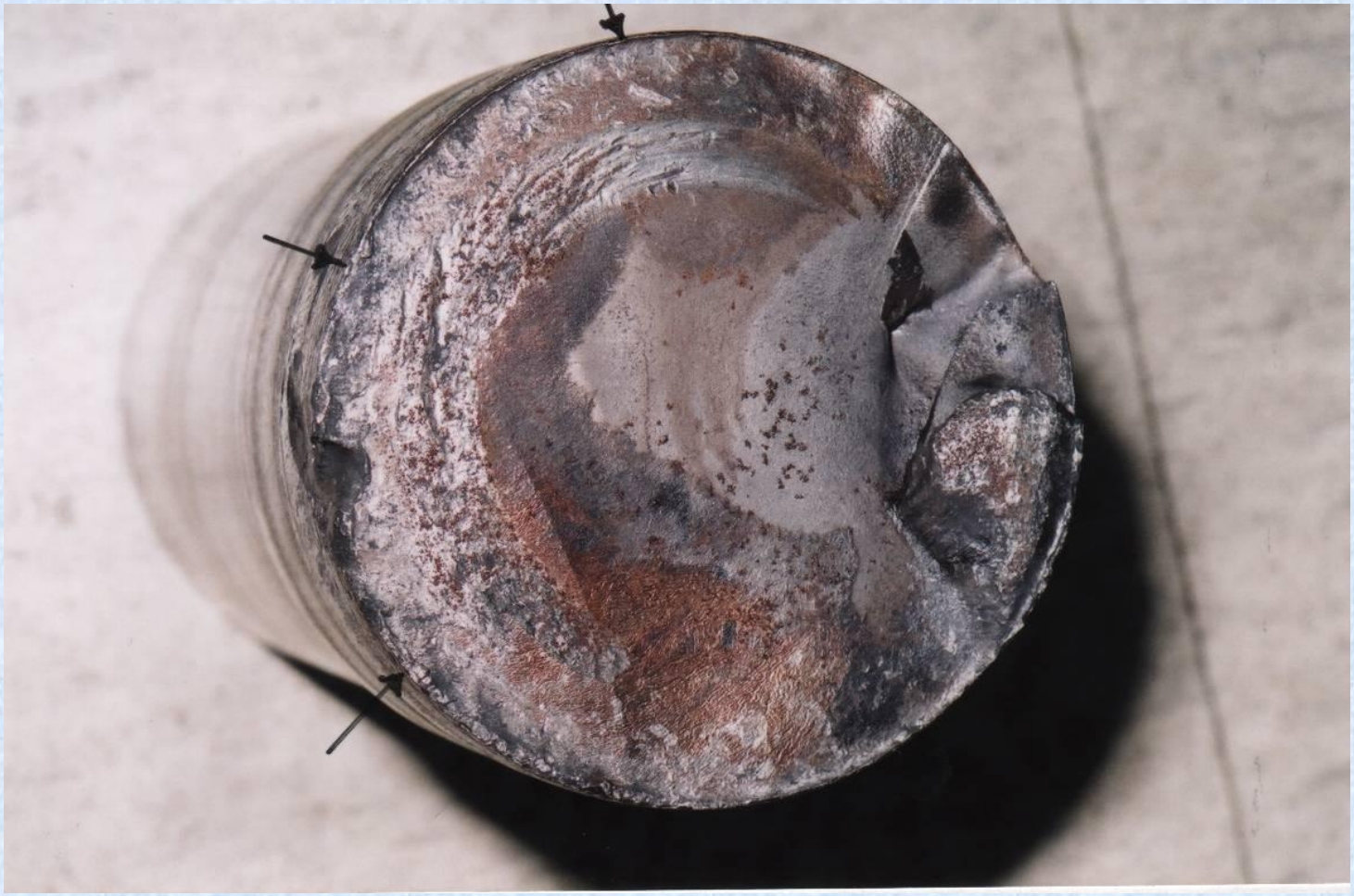

FRETTING FATIGUE OF INTERFERENCE FITTED SHAFTS

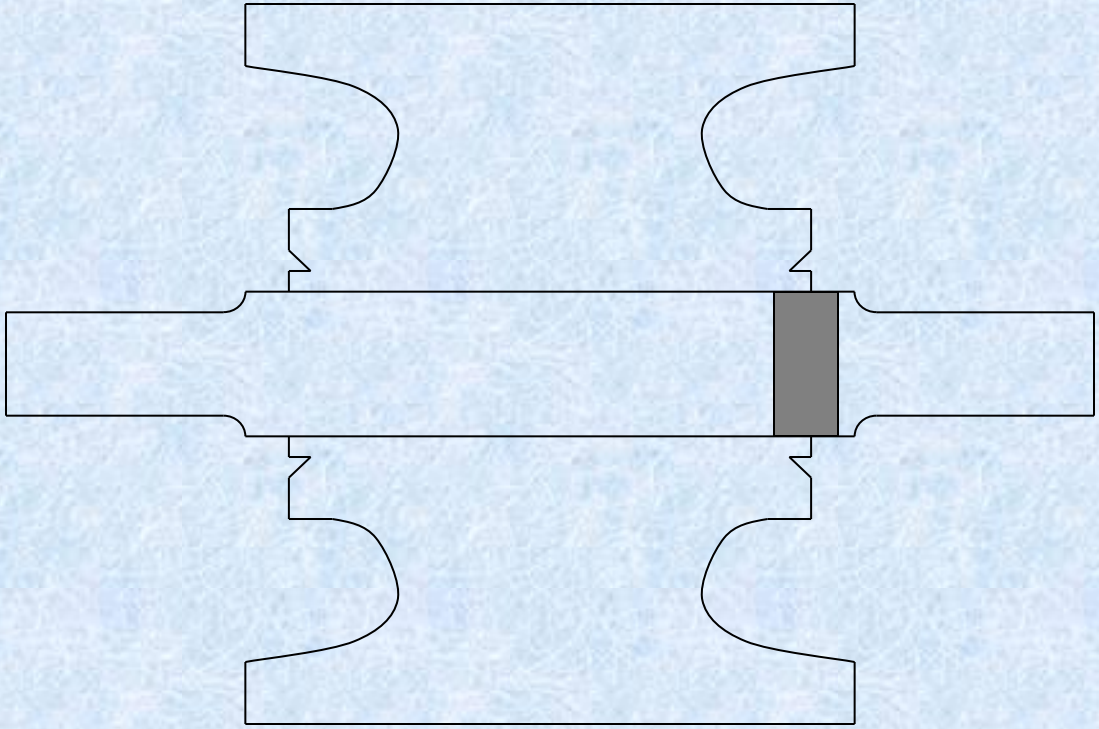

- Crack detected by UT. This section removed by boring out the shaft and leaving OD intact, then shrunk by internal welding.

FRETTING FATIGUE OF INTERFERENCE FITTED SHAFTS



FRETTING FATIGUE OF INTERFERENCE FITTED SHAFTS



FRETTING FATIGUE OF INTERFERENCE FITTED SHAFTS

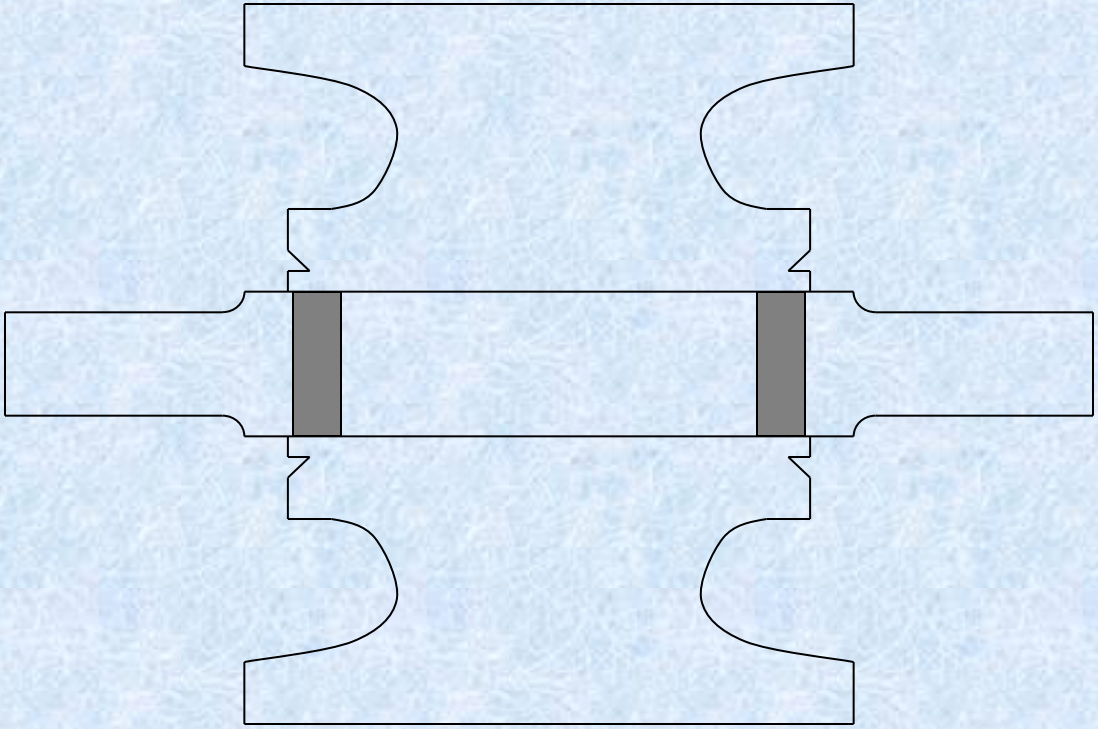

- Region of relative movement and fretting at the ends of the interference fitted portion.

FRETTING FATIGUE OF INTERFERENCE FITTED SHAFTS

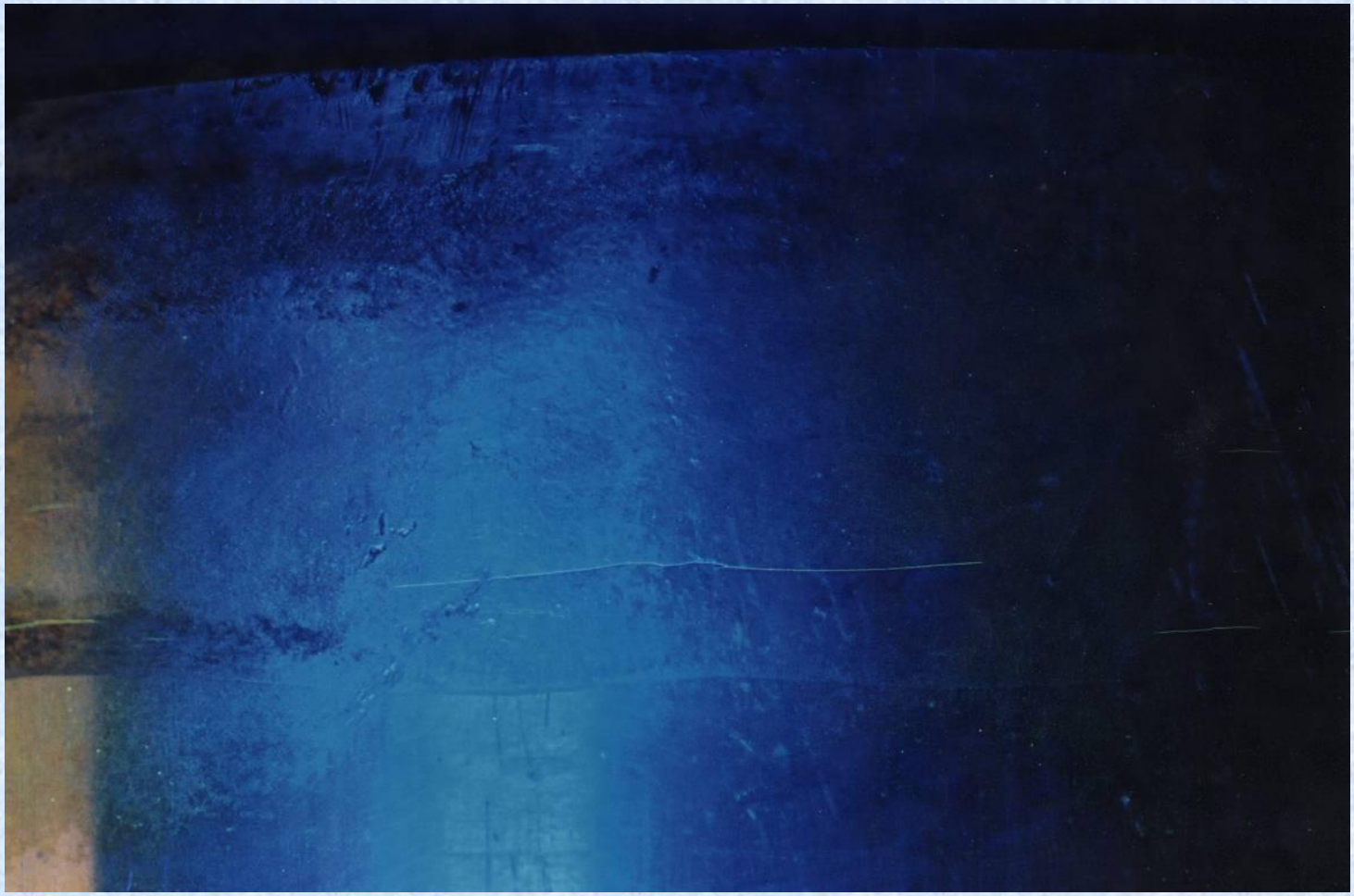

FRETTING FATIGUE OF INTERFERENCE FITTED SHAFTS



FRETTING FATIGUE OF INTERFERENCE FITTED SHAFTS



Fatigue fracture surface and projected depth of the crack.

FRETTING FATIGUE OF INTERFERENCE FITTED SHAFTS

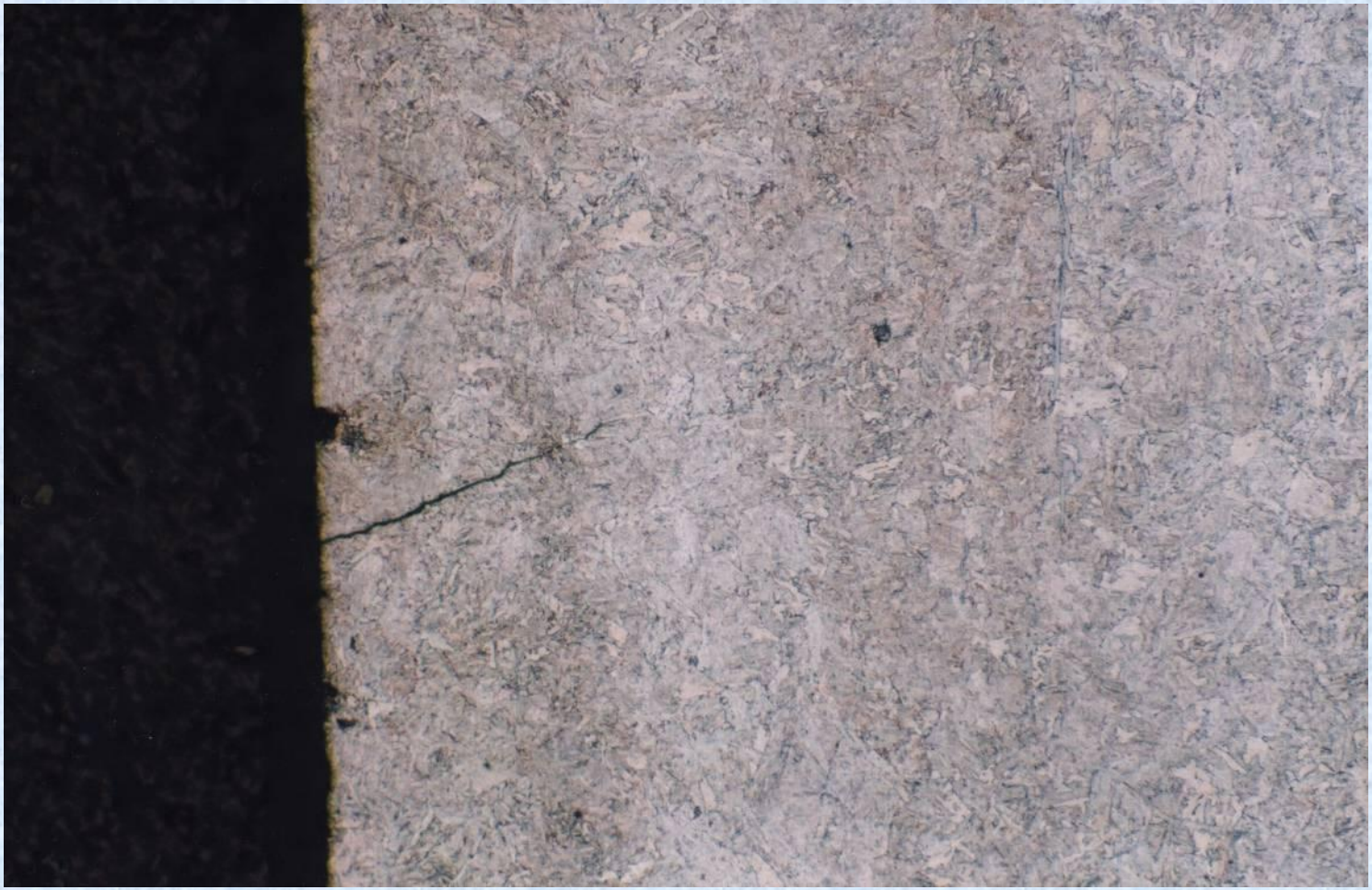

Micrograph showing one of the shallow cracks. X50

FRETTING FATIGUE OF INTERFERENCE FITTED SHAFTS

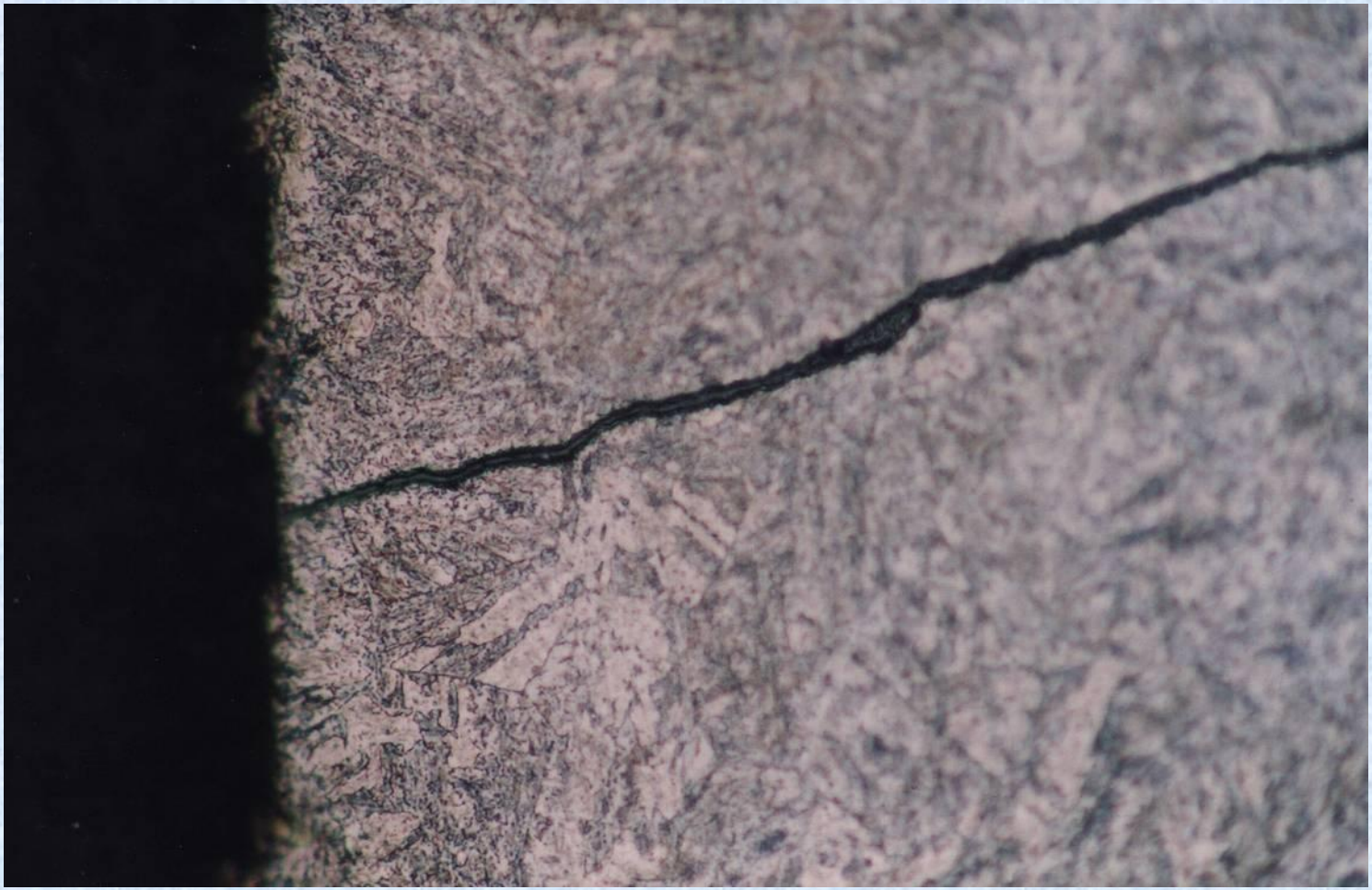

Micrograph showing one of the shallow cracks. X600

FRETTING FATIGUE OF INTERFERENCE FITTED SHAFTS

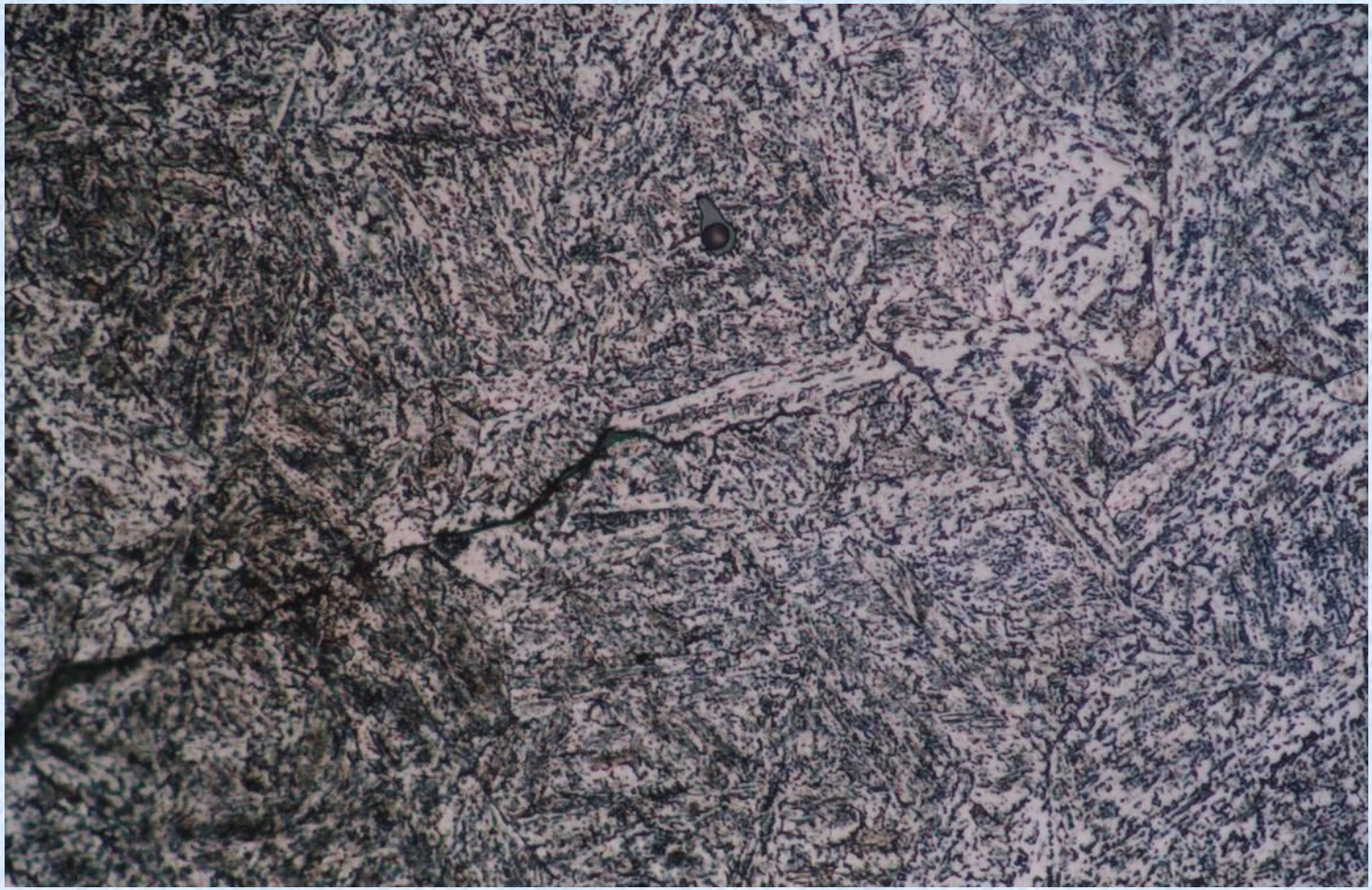

Micrograph showing crack tip. X600

FRETTING FATIGUE OF INTERFERENCE FITTED SHAFTS

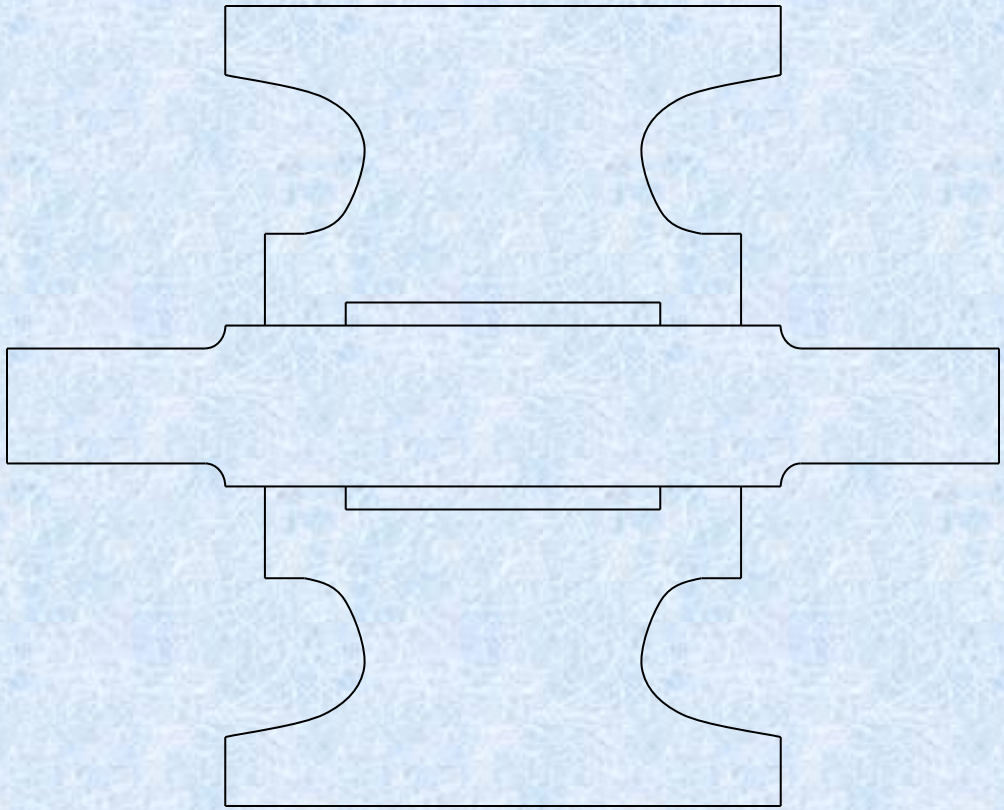

One method used to reduce stiffness of the hub.